DIMENSIONS IN MILLIMETRES | PROJECTION

SIDE VIEW

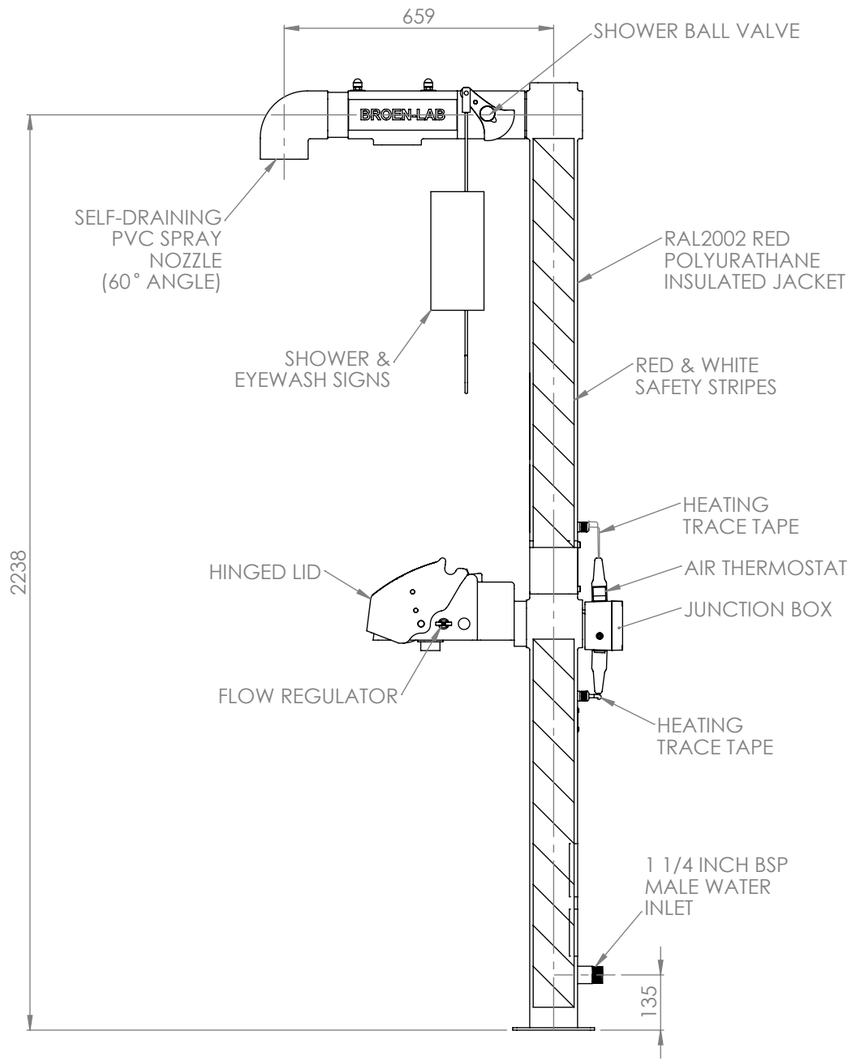

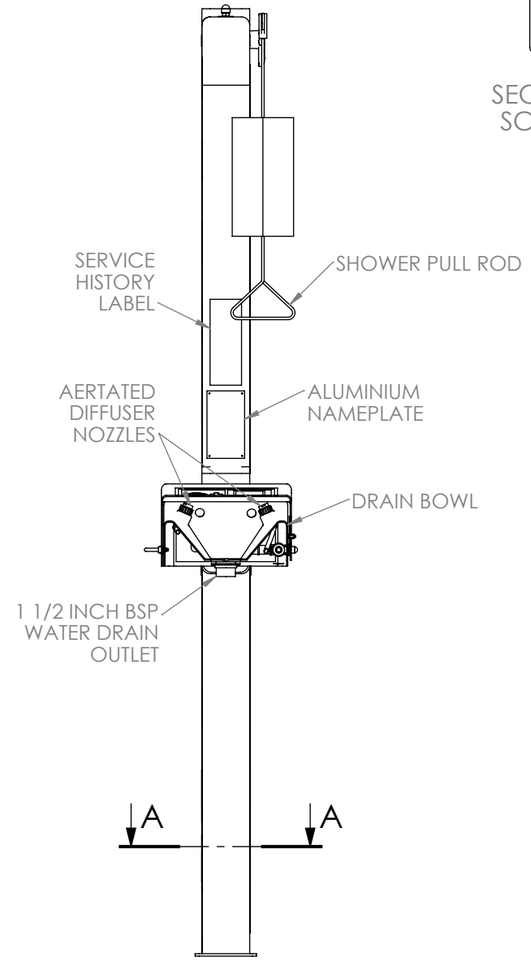

EYEWASH BOWL CUT AWAY FOR CLARITY

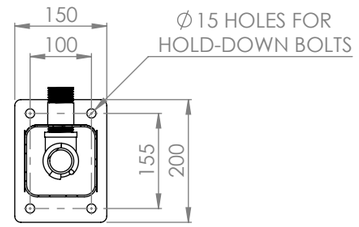

SECTION A-A
SCALE 1 : 10

ISOMETRIC VIEW

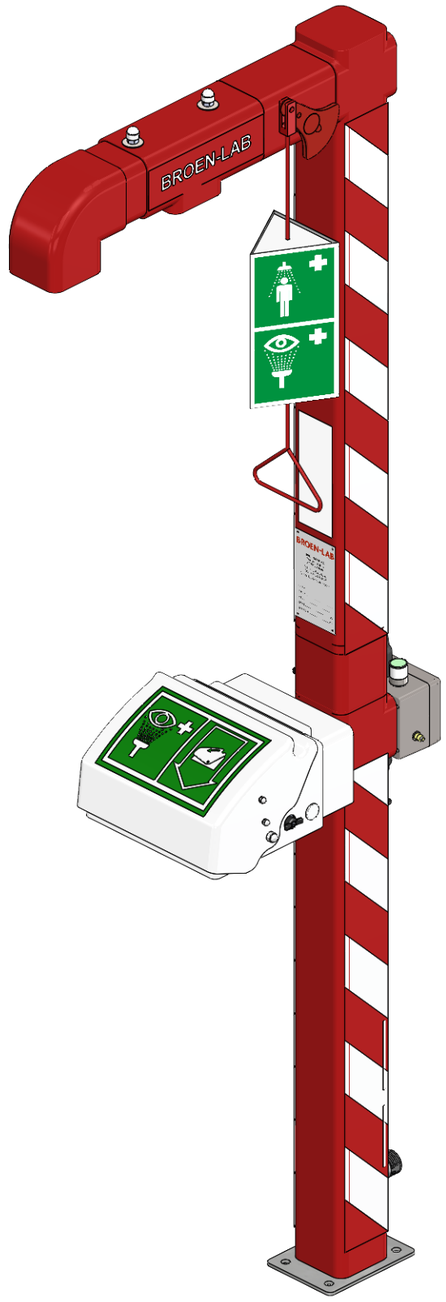

WIRING DIAGRAM

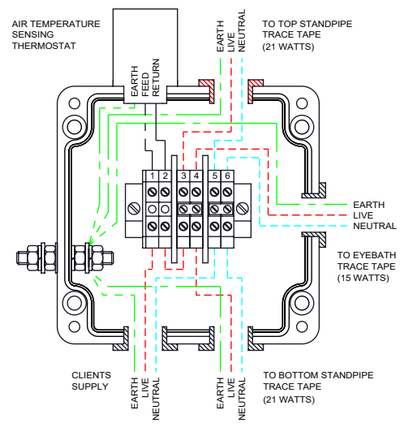

FROST PROTECTED EMERGENCY SAFETY SHOWER.
MODULES ARE REMOVABLE WITH STANDPIPE IN SITU.
MINIMUM WORKING TEMPERATURE: -20°C

BROEN-LAB
Drejervaenget 2
5610 Assens
Denmark
Tel. +45 6376 6376
lab@broen-lab.com

	NAME	DATE
DRAWN:	S.W.	25/10/12
CHECKED:	A.L.	26/10/12
APPROVED:	A.L.	26/10/12

MATERIAL: 304 STAINLESS STEEL

DEBUR AND BREAK SHARP EDGES

DIMENSIONS ARE IN MILLIMETRES UNLESS SPECIFIED OTHERWISE

TOLERANCES: LINEAR: ANGULAR:

SCALE:1:20

DO NOT SCALE OFF DRAWING

TITLE: OUTDOOR EMERGENCY SAFETY SHOWER WITH EYE/FACEWASH FOUNTAIN. SUITABLE FOR FLAMEPROOF AREAS. SUPPLY VOLTAGE 230V, 50 OR 60 HZ.

FINISH: CLEAN

SHEET 1 OF 1

DWG NO. H7410021000221

REVISION B

A3